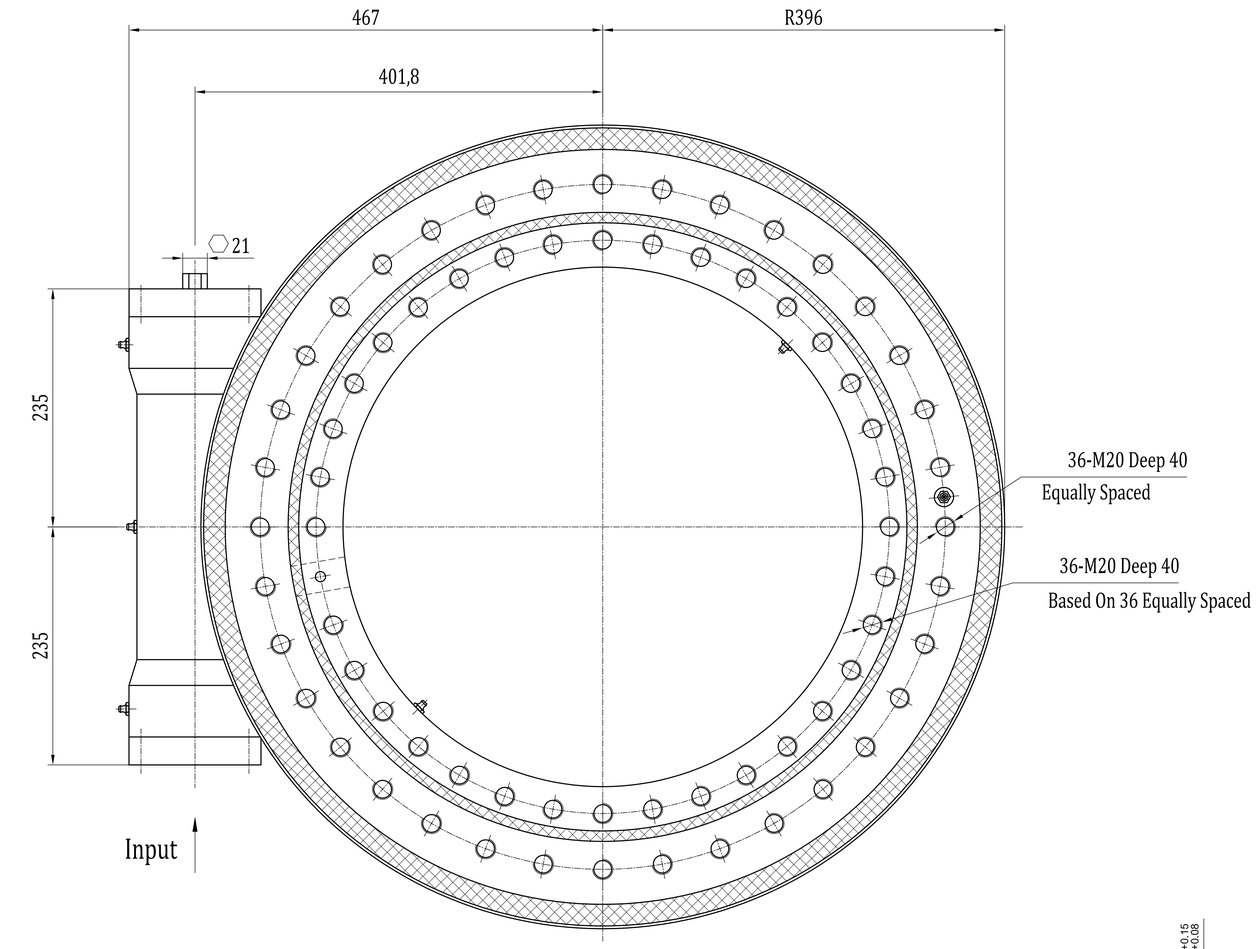

Slewing Drive Performance Parameters	
Rated Output Speed	< 2.5 rpm
Rated Output Torque	30 kN.m
Tilting Moment（Max.）	271 kN.m
Holding Torque	158,3 kN.m
Static Axial Rating	2360 kN
Static Radial Rating	945 kN
Dynamic Axial Rating	590 kN
Dynamic Radial Rating	470 kN
Gear Ratio	150 : 1
Efficiency	40 %
Precision	≤ 0.15 °

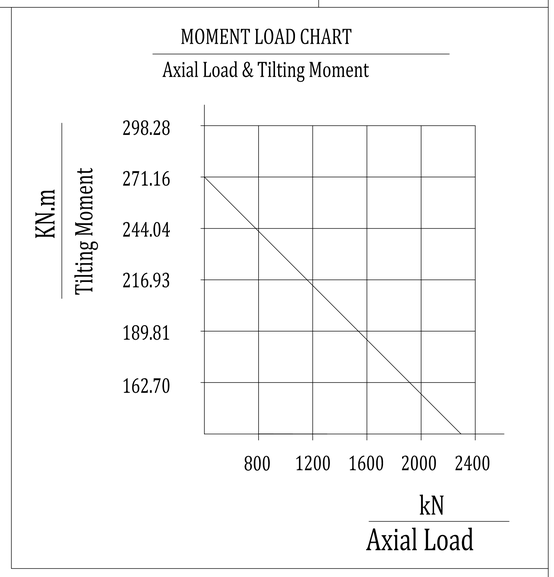

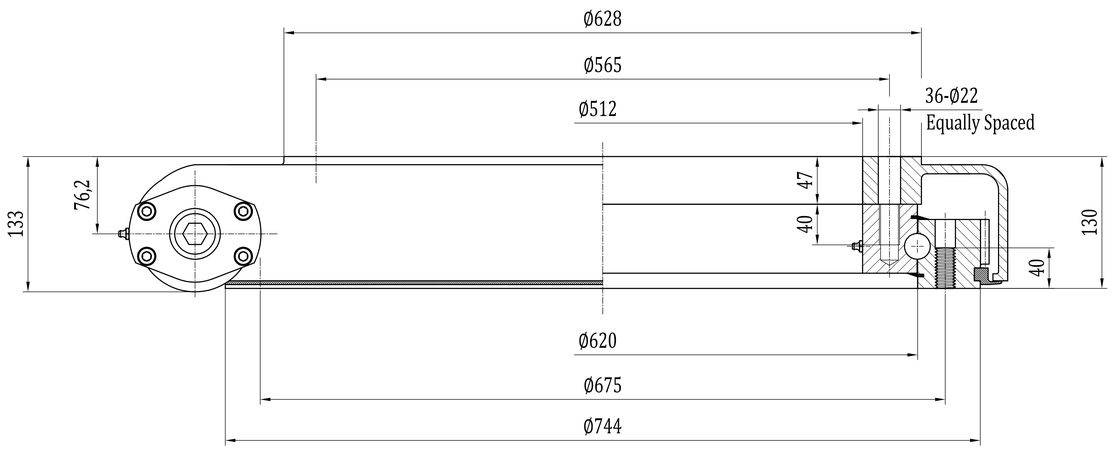

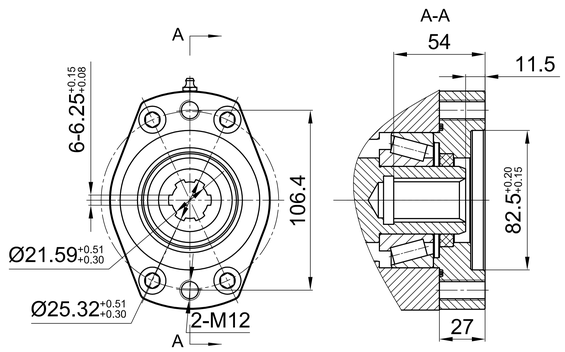

REV	DATE	REVISER	REVISER
DESIGNED BY	2019/11/20	Li Ming	www.coresundrive.com
CHECKED BY	2019/11/20	Rui Wang	Coresun Drive Equipment Changzhou Co., Ltd.
APPROVED BY	2019/11/20	Shane Zhang	

ALL PROPRIETARY RIGHTS IN THE SUBJECT MATTER HERE OF ARE RESERVED, AND NO PERMISSION IS GRANTED OR TO DISCLOSE REPRODUCE THIS PRINT IN WHOLE OR IN PART, ANY OF THE INFORMATION TO OTHERS.

WEIGHT	SCALE	Slewing Drive	
	1 : 4		
SIZE	A3	SC25-150B-BRH	REV
SHEET	1 / 1		A

SYMBOLE ISO